N1/2, SEC.15, T.20S., R.24E, M.D.B.&M.

Tax Area Codes 174–02
005–000
005–001
005–104
149–003

DISCLAIMER

THIS MAP WAS PREPARED FOR LOCAL PROPERTY ASSESSMENT PURPOSES ONLY AND THE PARCELS SHOWN HEREON MAY NOT COMPLY WITH STATE AND LOCAL SUBDIVISION ORDINANCES, AND NO LIABILITY IS ASSUMED FOR THE USE OF THE INFORMATION SHOWN HEREON. R & T CODE SEC. 327, 408.3, ETC.

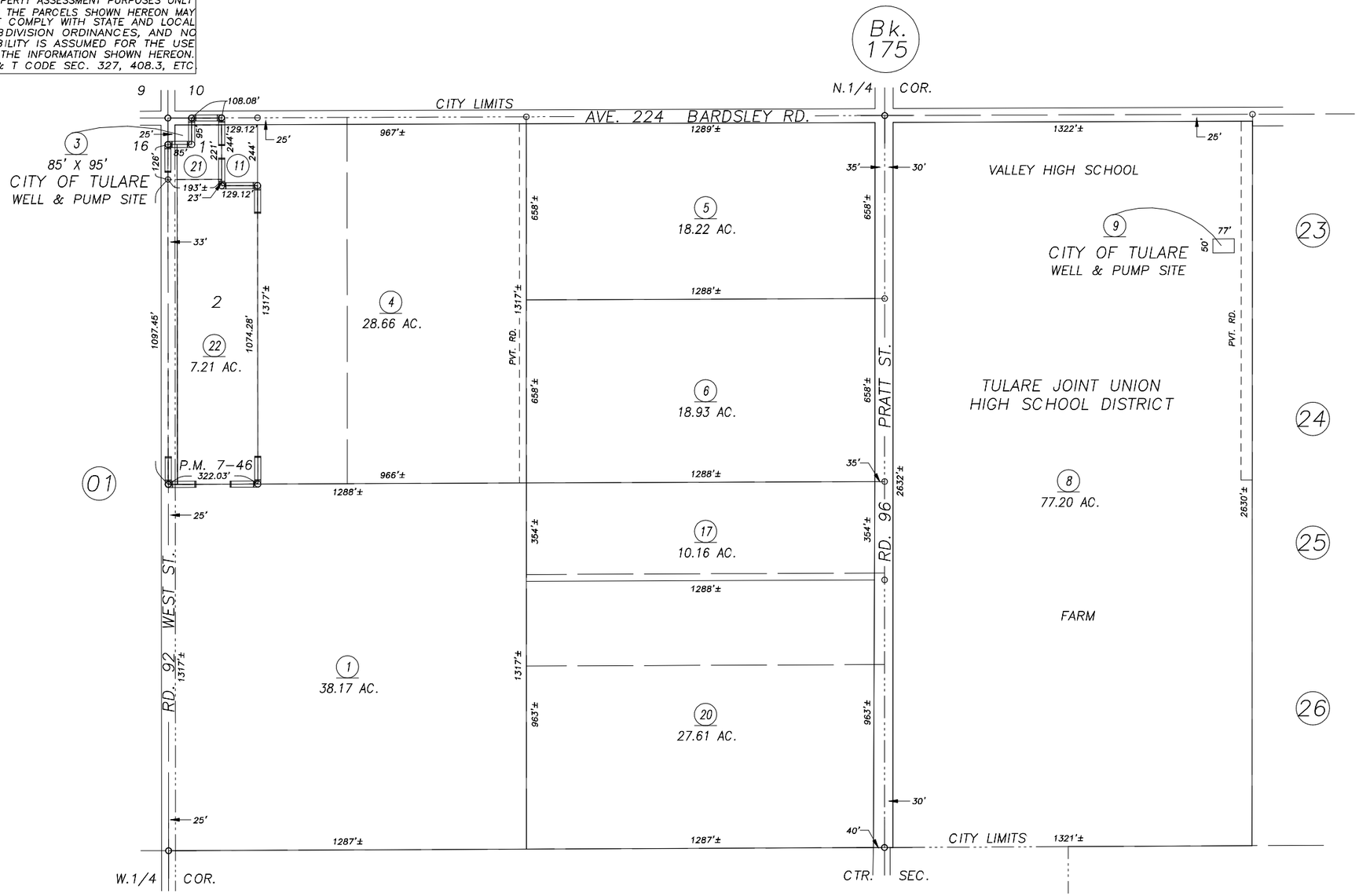

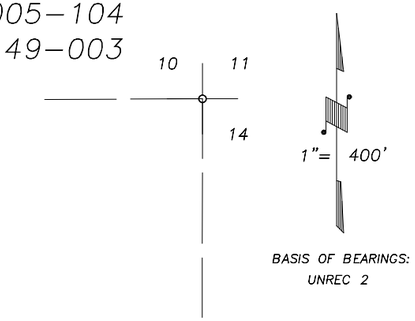

RECORD OF SURVEY, L.S. 1–27 (NW1/4)
RECORD OF SURVEY, L.S. 1–78 (N–S CTR. SEC. LN.)
PARCEL MAP NO. 646, P.M. 7–46
POR. TULARE IRRIGATION DISTRICT, UNREC 1 (SEC. 15, ETC.)
POR. 199 DEVELOPMENT PARTNERS SURVEY, UNREC 2

VICINITY OF TULARE
ASSESSOR'S MAPS BK.174 , PG.02
COUNTY OF TULARE, CALIFORNIA, U.S.A.

NOTE: Assessor's Parcel Numbers Shown in Circles (1)
Assessor's Block Numbers Shown in Ellipses (123)

REVISION	DATE	TECH
CAD CONVERSION	9/15/2015	ARL