S 1/2 SEC.7, T.16S., R.26E., M.D.B.&M.

Tax Area Codes 036–21
068–015

DISCLAIMER

THIS MAP WAS PREPARED FOR LOCAL PROPERTY ASSESSMENT PURPOSES ONLY AND THE PARCELS SHOWN HEREON MAY NOT COMPLY WITH STATE AND LOCAL SUBDIVISION ORDINANCES, AND NO LIABILITY IS ASSUMED FOR THE USE OF THE INFORMATION SHOWN HEREON.

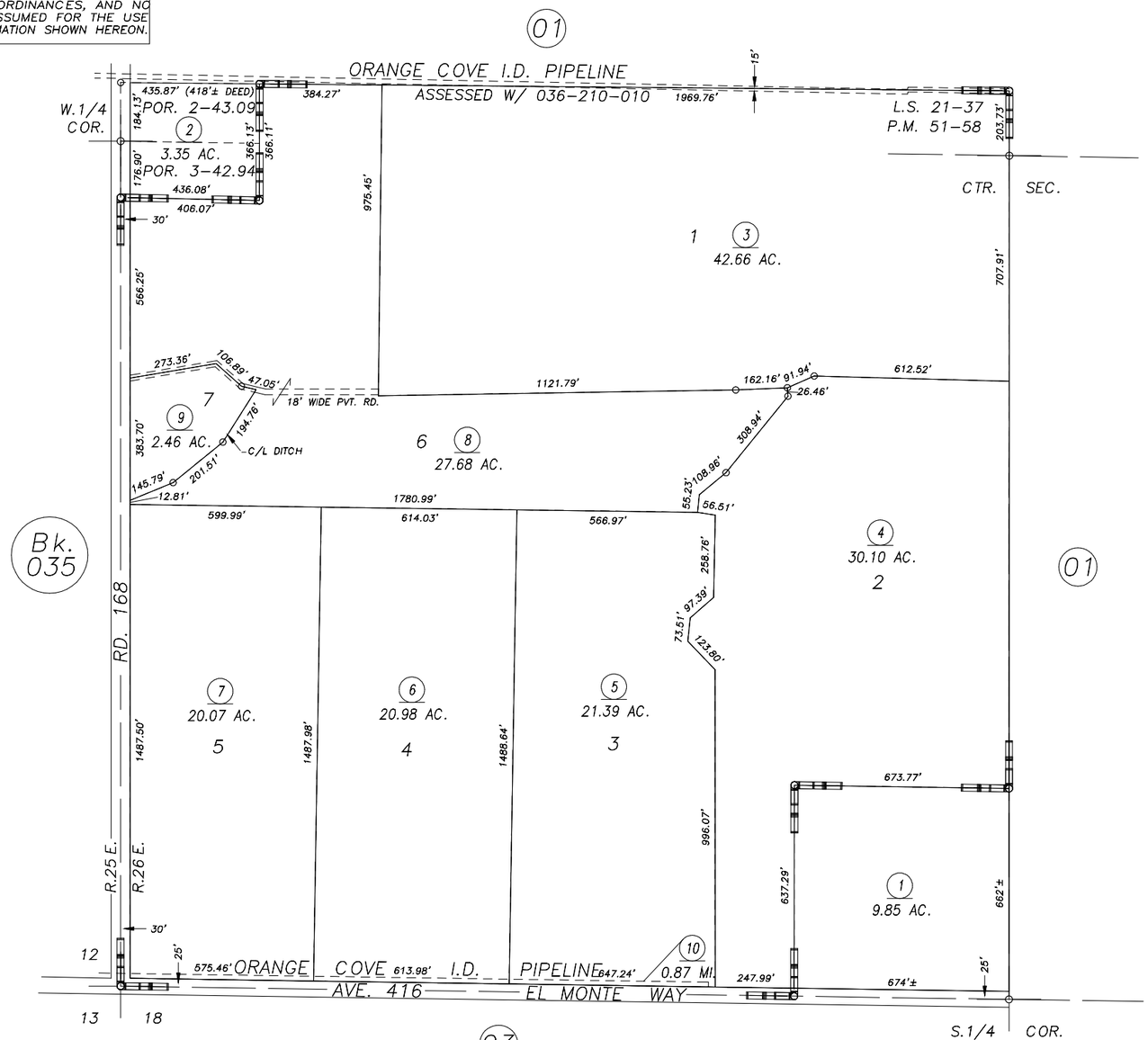

RECORD OF SURVEY, L.S. 21–37
PARCEL MAP NO. 5052, P.M. 51–58

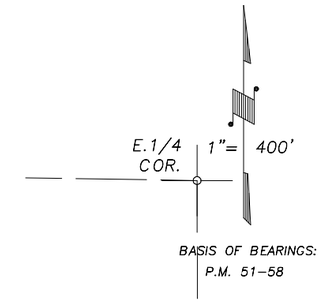

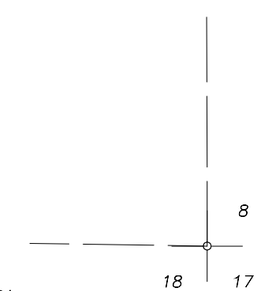

VICINITY OF OROSI
ASSESSOR'S MAPS BK.036 , PG.21
COUNTY OF TULARE, CALIFORNIA, U.S.A.

NOTE: Assessor's Parcel Numbers Shown in Circles (1)
Assessor's Block Numbers Shown in Elipses (123)

REVISION	DATE	TECH
2011–0077570	05/24/2012	JLC