69

POR. S 1/2 OF NW 1/4 SEC. 2, T.18S., R.27E., M.D.B. & M.
POR. NE 1/4 SEC. 3, T.18S., R.27E., M.D.B. & M.

TAX CODE AREA 133-002

113-15

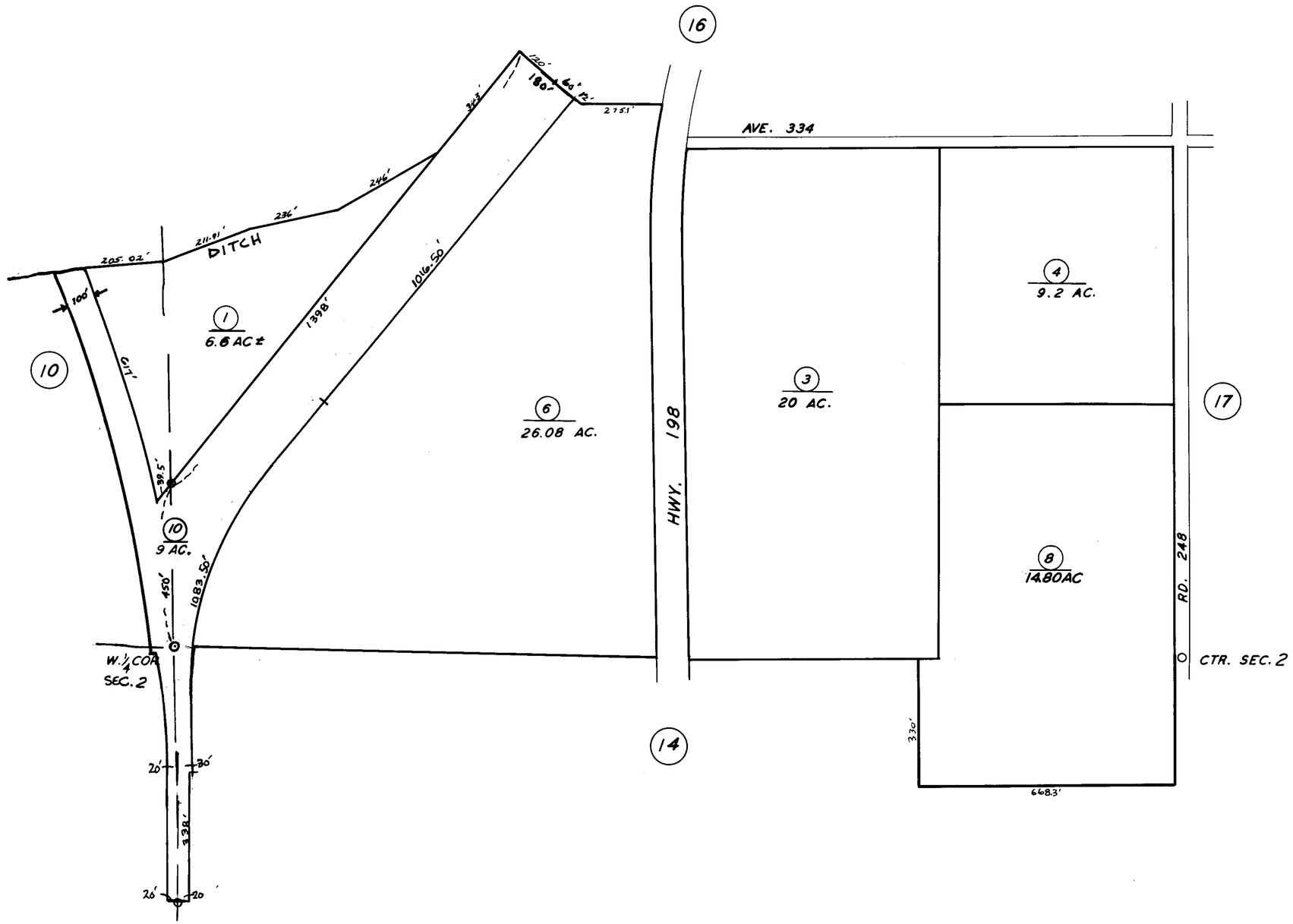

ASSESSOR'S MAPS BK. 113 PG. 15.
COUNTY OF TULARE, CALIF.

NOTE — ASSESSOR'S BLOCK NUMBERS SHOWN IN ELLIPSES
ASSESSOR'S PARCEL NUMBERS SHOWN IN CIRCLES

2-15-62 TN