DISCLAIMER

THIS MAP WAS PREPARED FOR LOCAL PROPERTY ASSESSMENT PURPOSES ONLY AND THE PARCELS SHOWN HEREON MAY NOT COMPLY WITH STATE AND LOCAL SUBDIVISION ORDINANCES, AND NO LIABILITY IS ASSUMED FOR THE USE OF THE INFORMATION SHOWN HEREON.

POR. FRL. SECTION 16, T.19S., R.25E., M.D.B. & M.

Tax Area Code 126–15
145–006
153–105
153–107

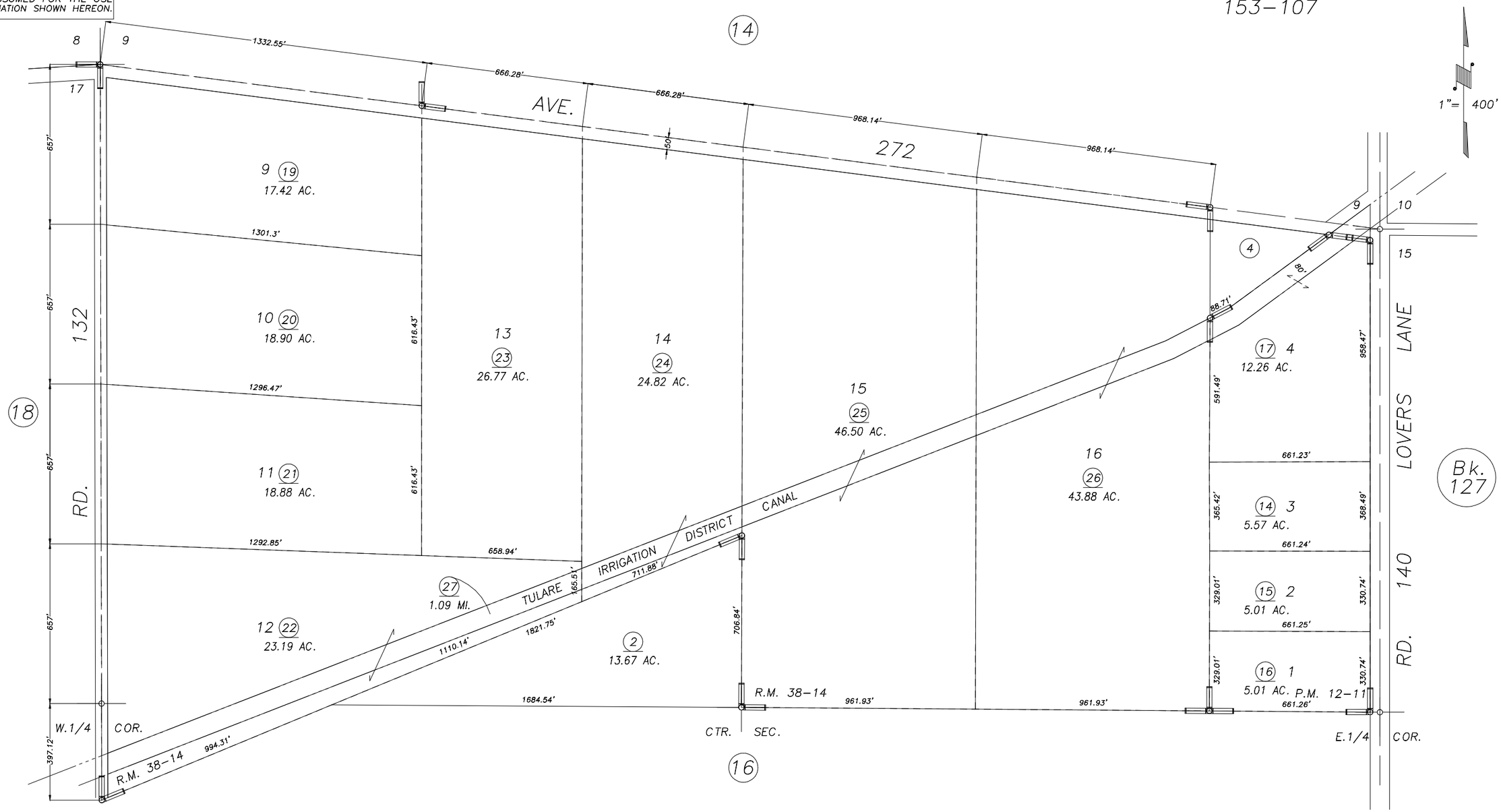

R.M. 38–14	2/16/99	KPT
REVISION	DATE	BY

POR. PARCEL MAP 985, P.M. 10–86
POR. RECORD OF SURVEY (SEC. 16), L.S. 2–10
PARCEL MAP 1110, P.M. 12–11
POR. TRACT NO. 728, R.M. 38–14

ASSESSOR'S MAPS BK. 126 , PG. 15 .
COUNTY OF TULARE, CALIF.

NOTE: Assessor's Block Numbers Shown in Ellipses
Assessor's Parcel Numbers Shown in Circles

99/00