DISCLAIMER

THIS MAP WAS PREPARED FOR LOCAL PROPERTY ASSESSMENT PURPOSES ONLY AND THE PARCELS SHOWN HEREON MAY NOT COMPLY WITH STATE AND LOCAL SUBDIVISION ORDINANCES, AND NO LIABILITY IS ASSUMED FOR THE USE OF THE INFORMATION SHOWN HEREON.

SEC.'S 1, 2, 3, 10, 11, & 12, T.16 S., R.26 E., M. D. B. & M.

Tax Area Code
068–022
161–002

36–02

1"= 1600'

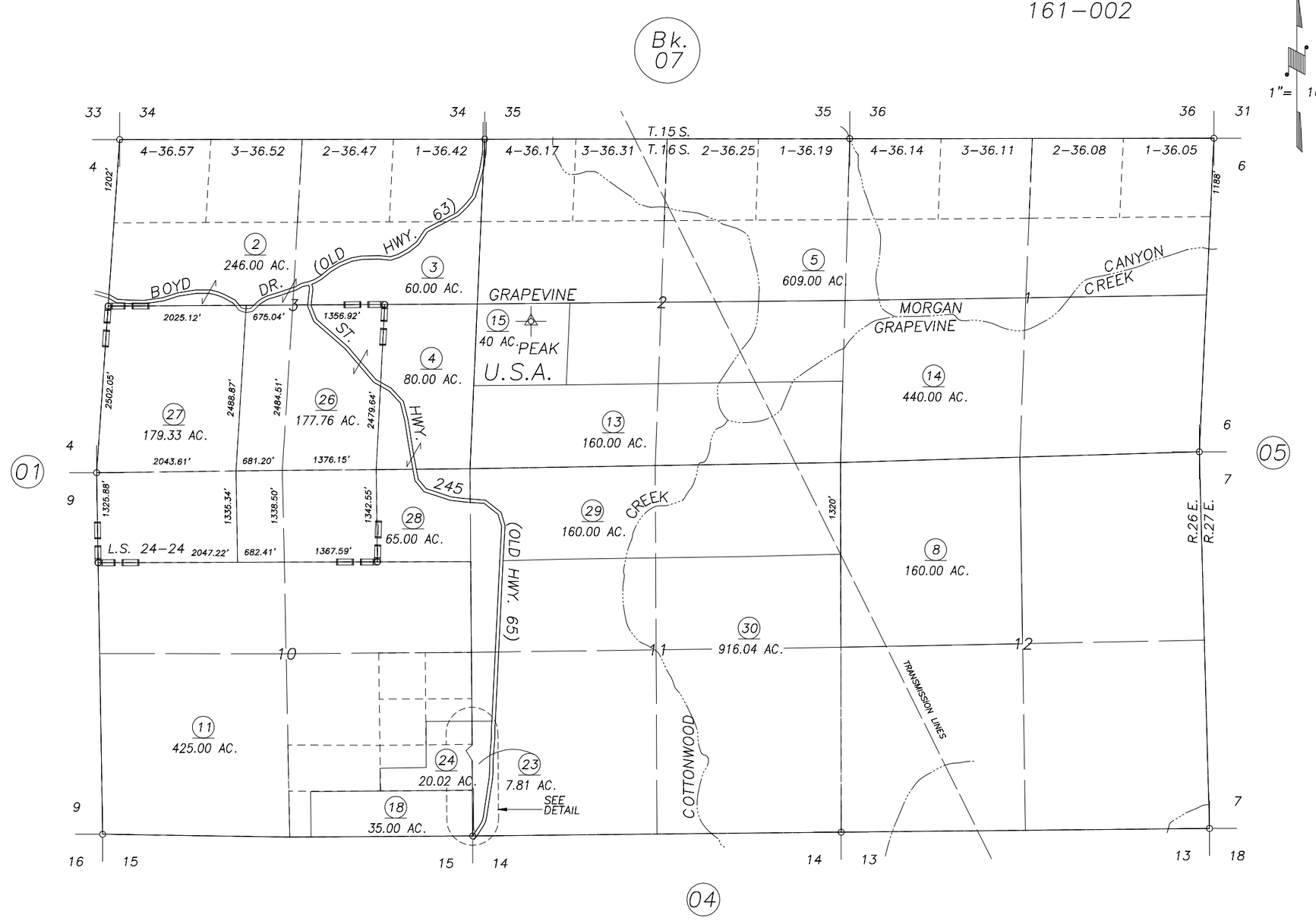

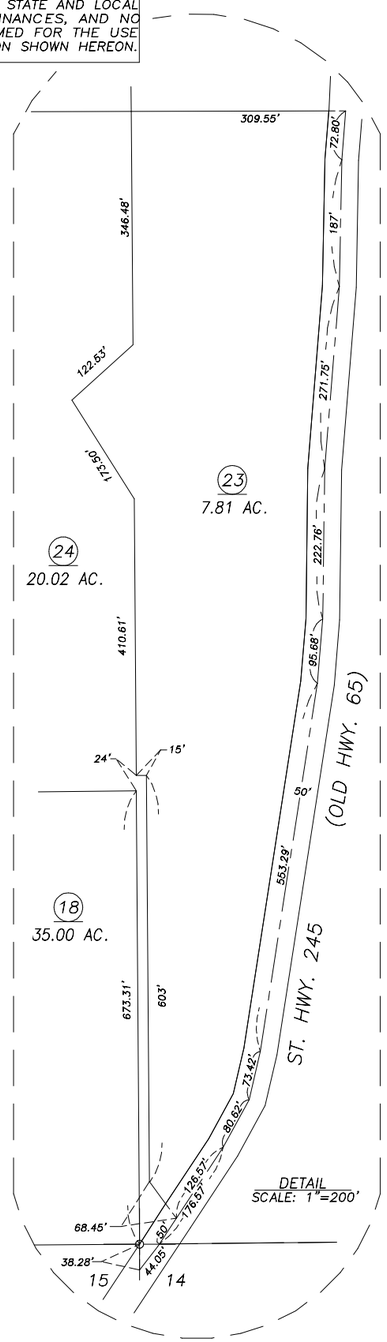

REVIEW	06/04/01	RJL
REVISION	DATE	BY

POR. RECORD OF SURVEY, L.S. 17–71 (HWY 245)
RECORD OF SURVEY, L.S. 24–24

ASSESSOR'S MAPS BK. 36 , PG. 02 .
COUNTY OF TULARE, CALIF.

NOTE: Assessor's Block Numbers Shown in Ellipses
Assessor's Parcel Numbers Shown in Circles

01/02

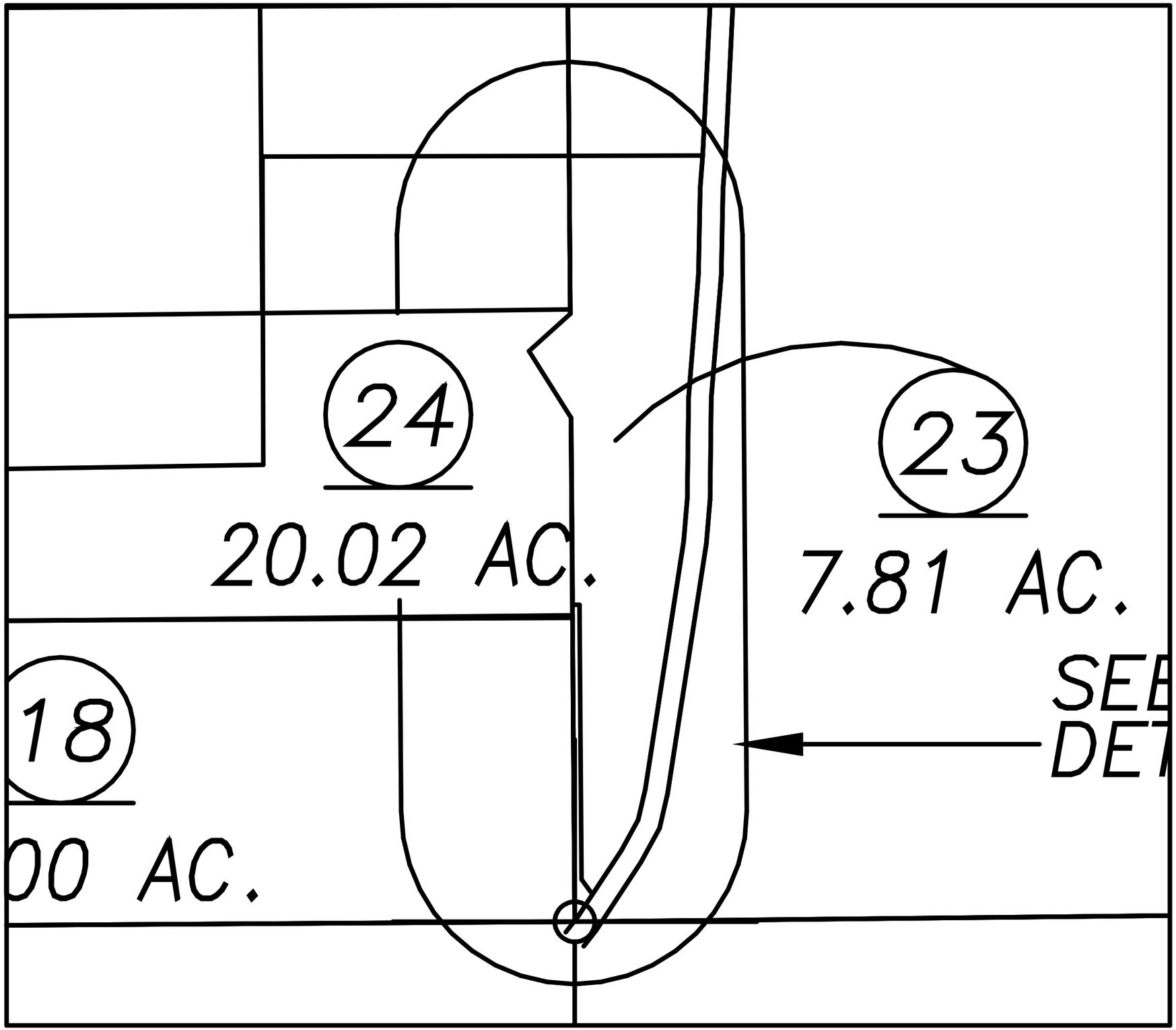
24
20.02 AC.
23
7.81 AC.
18
00 AC.
SEE
DET