DISCLAIMER

THIS MAP WAS PREPARED FOR LOCAL PROPERTY ASSESSMENT PURPOSES ONLY AND THE PARCELS SHOWN HEREON MAY NOT COMPLY WITH STATE AND LOCAL SUBDIVISION ORDINANCES, AND NO LIABILITY IS ASSUMED FOR THE USE OF THE INFORMATION SHOWN HEREON.

SEC.1, 2, 3, 10, 11, & 12, T.16S., R.26E., M.D.B.&M.

Tax Area Code 036–02
068–022
161–002

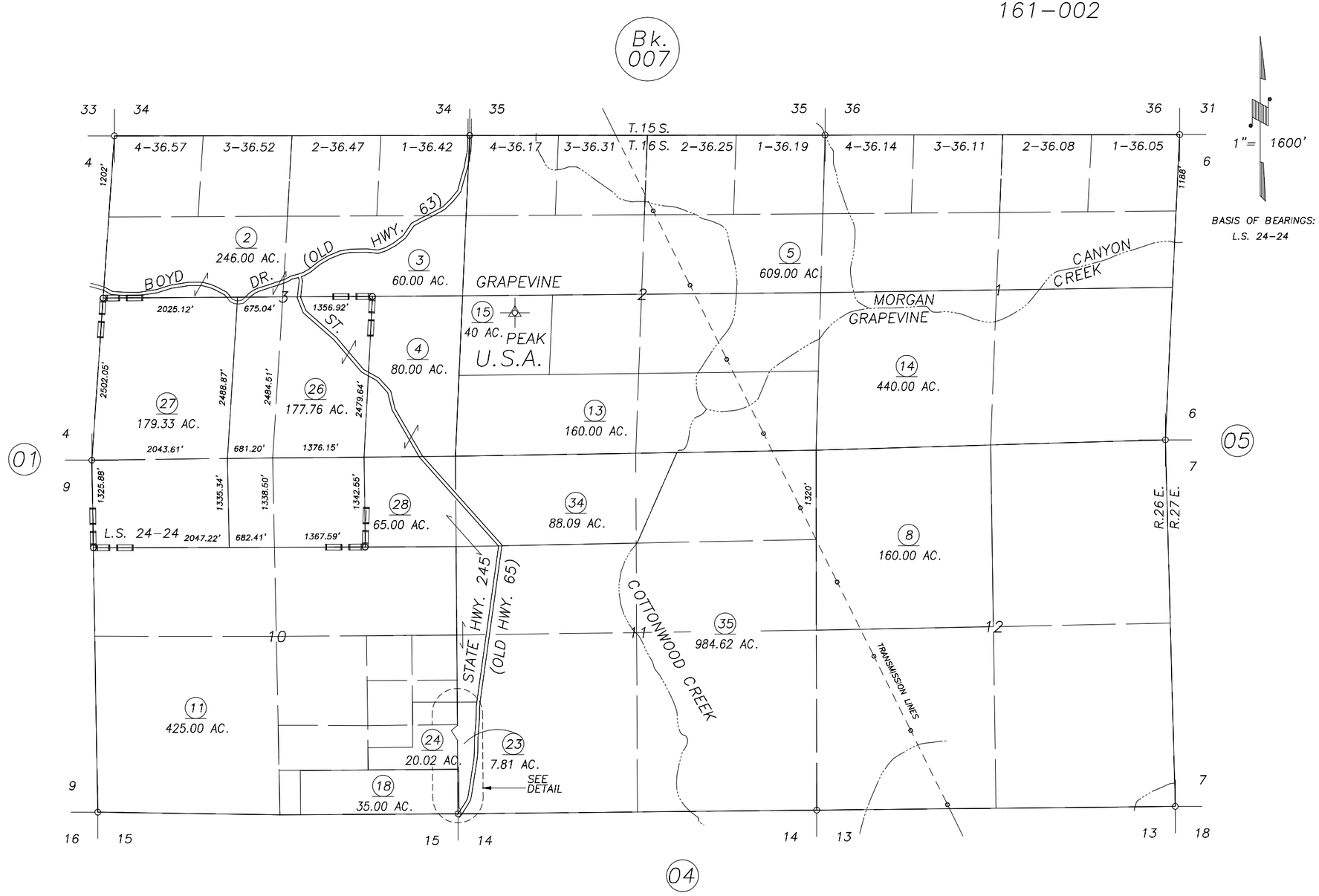

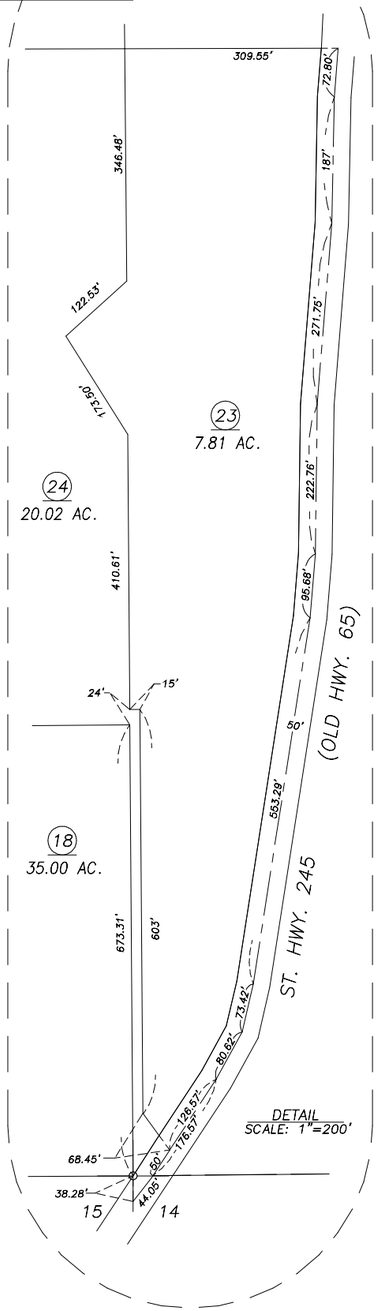

POR. RECORD OF SURVEY, L.S. 17–71 (STATE HWY. 245)
RECORD OF SURVEY, L.S. 24–24

VICINITY OF ELDERWOOD
ASSESSOR'S MAPS BK.036 , PG.02
COUNTY OF TULARE, CALIFORNIA, U.S.A.

NOTE: Assessor's Parcel Numbers Shown in Circles (1)
Assessor's Block Numbers Shown in Elipses (123)

REVISION	DATE	TECH
2002–0055495	01/02/2004	KMS

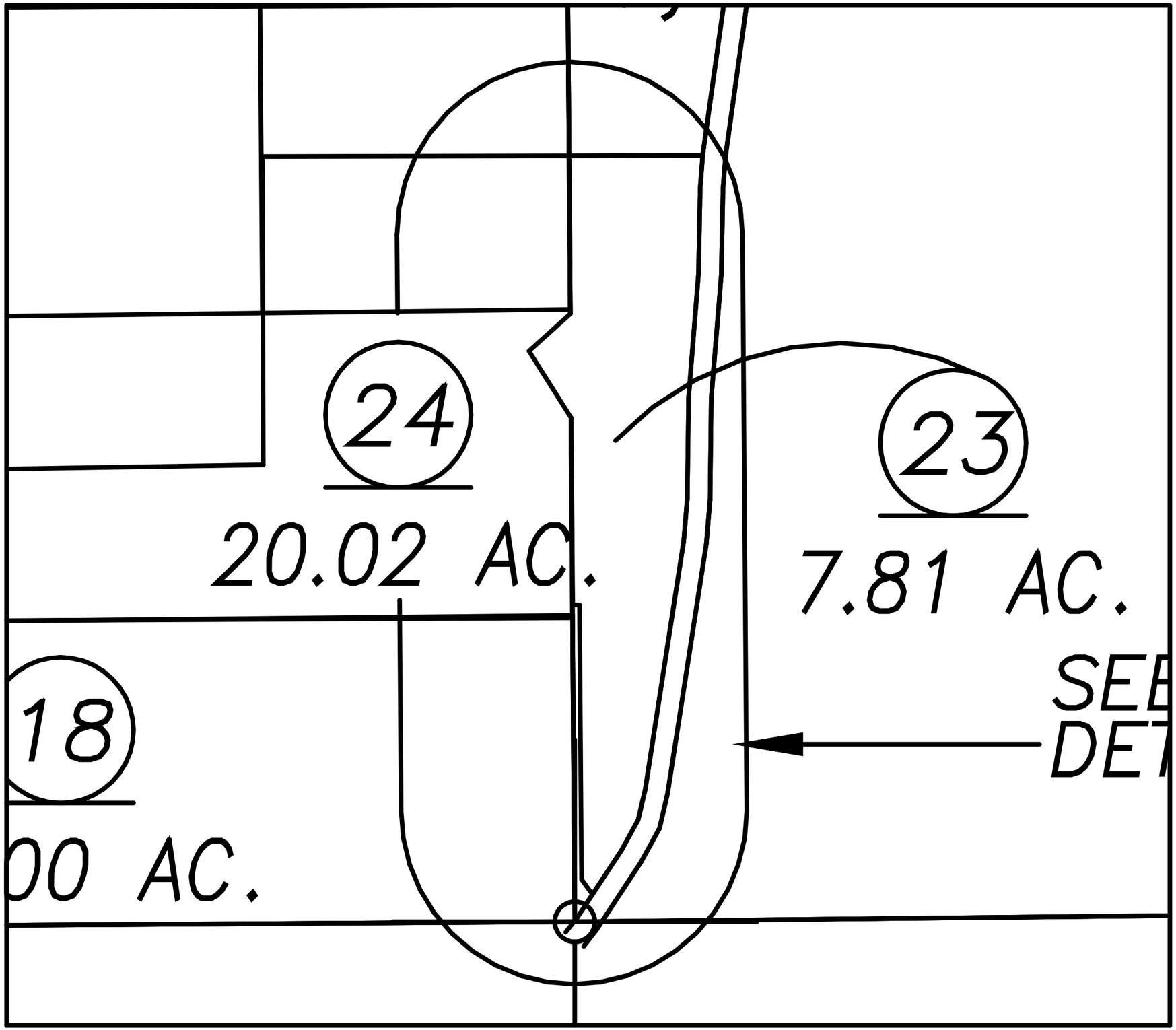
24
20.02 AC.
23
7.81 AC.
18
00 AC.
SEE
DET