N1/2 OF NE1/4 SEC.27, T.18S., R.25E., M.D.B.&M.

Tax Area Codes 103–12
006–157
006–226
153–028

DISCLAIMER

THIS MAP WAS PREPARED FOR LOCAL PROPERTY ASSESSMENT PURPOSES ONLY AND THE PARCELS SHOWN HEREON MAY NOT COMPLY WITH STATE AND LOCAL SUBDIVISION ORDINANCES, AND NO LIABILITY IS ASSUMED FOR THE USE OF THE INFORMATION SHOWN HEREON.

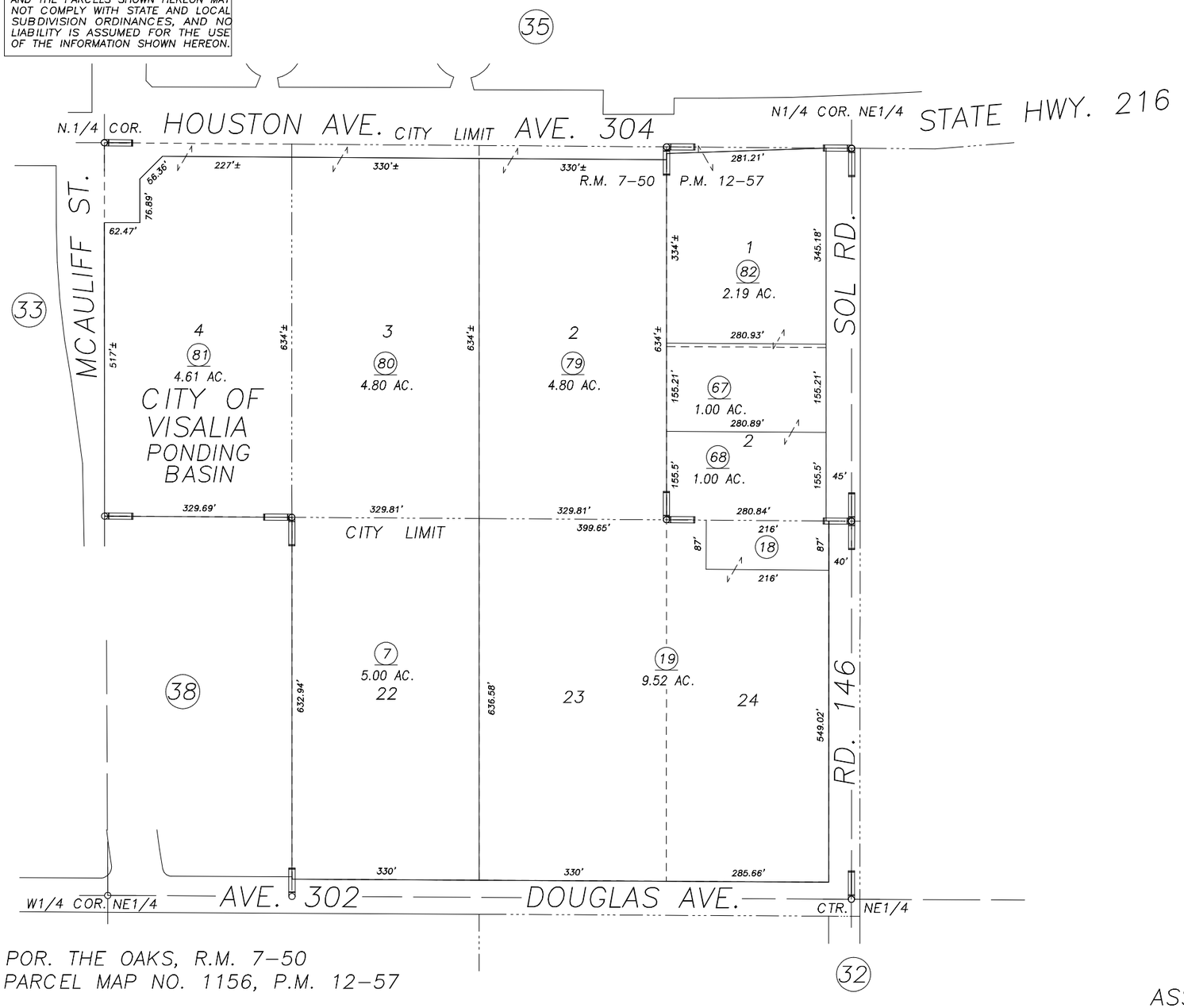

POR. THE OAKS, R.M. 7–50
PARCEL MAP NO. 1156, P.M. 12–57

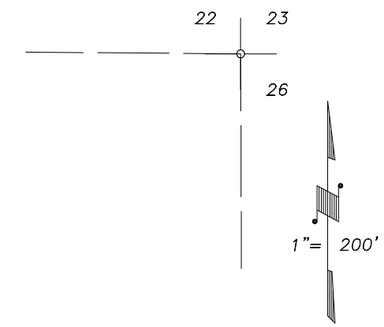

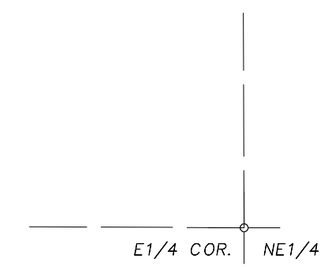

VICINITY OF VISALIA
ASSESSOR'S MAPS BK.103 , PG.12
COUNTY OF TULARE, CALIFORNIA, U.S.A.

NOTE: Assessor's Parcel Numbers Shown in Circles (1)
Assessor's Block Numbers Shown in Elipses (123)

2012–0060731	04/19/2013	CMB
REVISION	DATE	TECH