DISCLAIMER

THIS MAP WAS PREPARED FOR LOCAL PROPERTY ASSESSMENT PURPOSES ONLY AND THE PARCELS SHOWN HEREON MAY NOT COMPLY WITH STATE AND LOCAL SUBDIVISION ORDINANCES, AND NO LIABILITY IS ASSUMED FOR THE USE OF THE INFORMATION SHOWN HEREON.

S1/2 OF NW1/4 SEC.3, ALL SEC. 4, T.19S., R.24E., M.D.B.&M.

Tax Area Code 119–02

006–006 006–088
153–003 006–209
006–212 153–017

1" = 800'

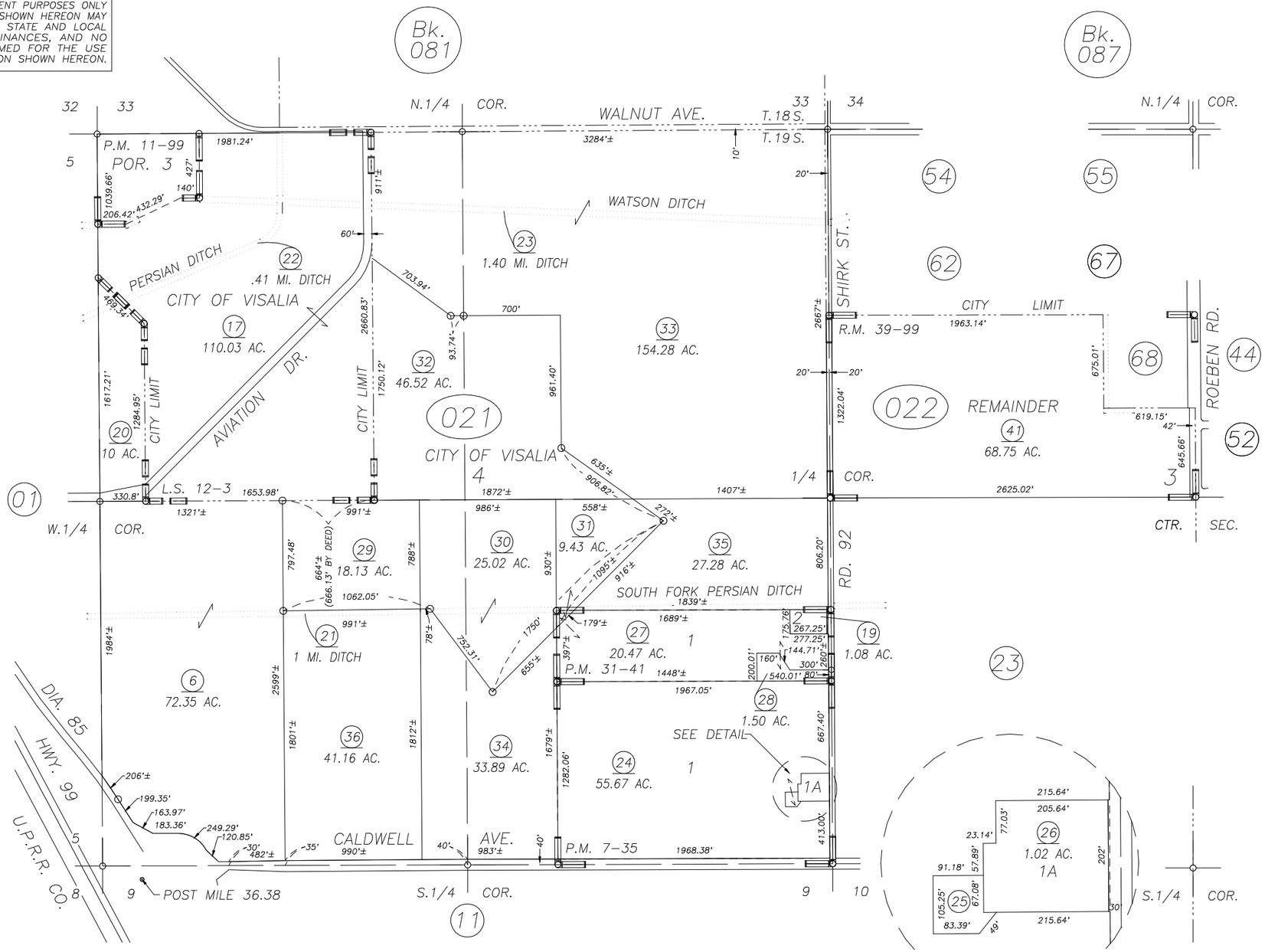

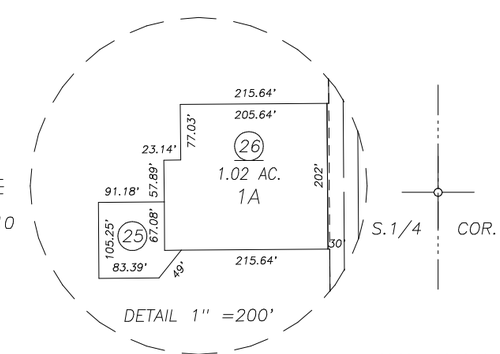

POR. RECORD OF SURVEY, L.S. 12–3
PARCEL MAP 635, P.M. 7–35
POR. PARCEL MAP 1098, P.M. 11–99
PARCEL MAP 3040, P.M. 31–41
POR. ROEBEN RANCH, R.M. 39–99

VICINITY OF VISALIA

ASSESSOR'S MAPS BK. 119 , PG. 02

COUNTY OF TULARE, CALIFORNIA, U.S.A.

NOTE: Assessor's Parcel Numbers Shown in Circles (1)
Assessor's Block Numbers Shown in Elipses (123)

REVISION	DATE	TECH
2007–0066517	04/02/2009	ASG