DISCLAIMER

THIS MAP WAS PREPARED FOR LOCAL PROPERTY ASSESSMENT PURPOSES ONLY AND THE PARCELS SHOWN HEREON MAY NOT COMPLY WITH STATE AND LOCAL SUBDIVISION ORDINANCES, AND NO LIABILITY IS ASSUMED FOR THE USE OF THE INFORMATION SHOWN HEREON.

POR. N 1/2 SECTION 21, T.21S., R.27E., M.D.B. & M.

Tax Area Code 245-01

4-098 4-106
4-124 4-133
4-134 61-000
126-001

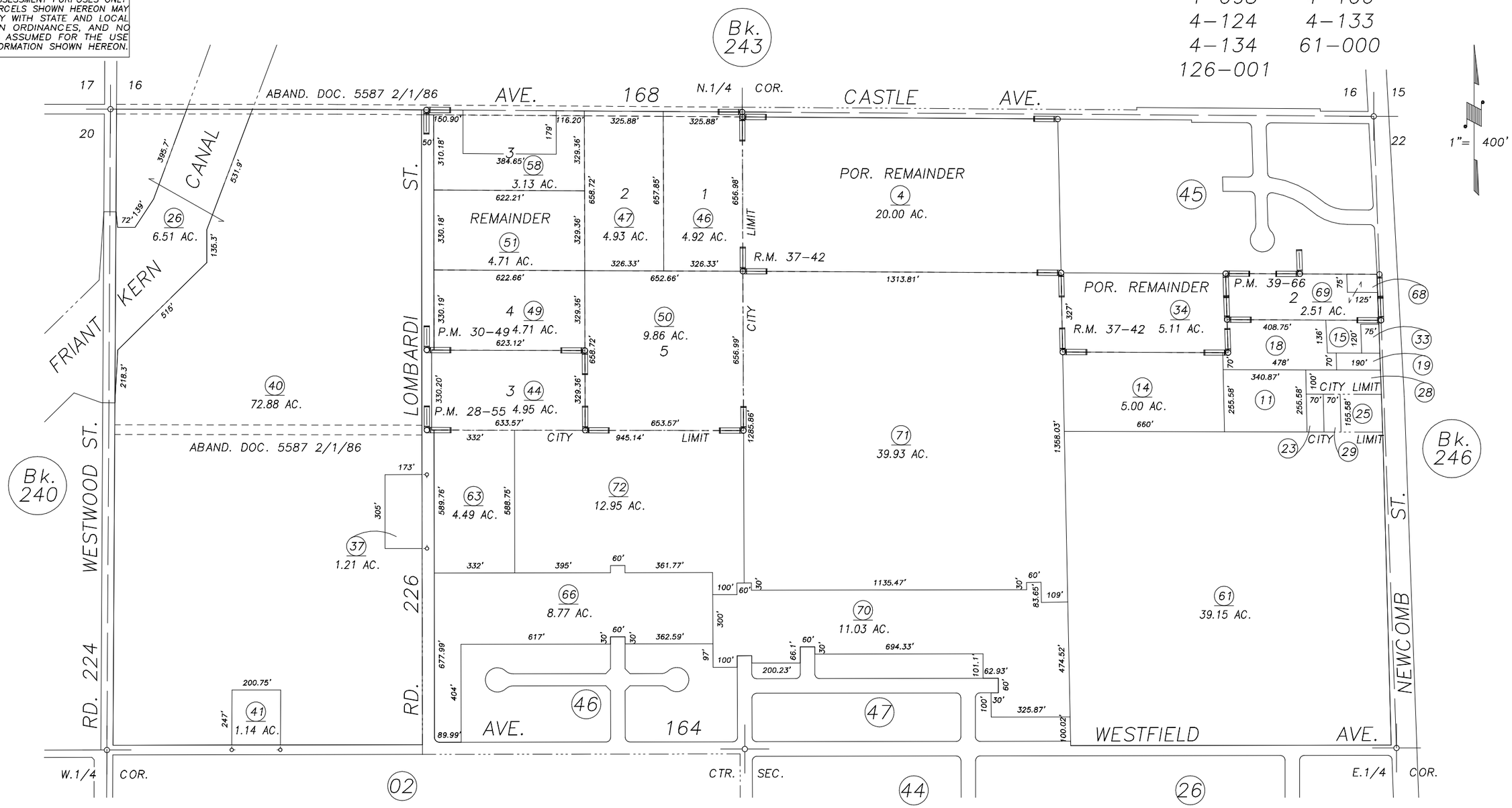

LLA 4-98	8/25/98	KPT
REVISION	DATE	BY

PARCEL MAP 2754, P.M. 28-55
PARCEL MAP 2948, P.M. 30-49
POR. PARCEL MAP 3863, P.M. 39-66
POR. CASTLE WOODS, R.M. 37-42

CITY OF PORTERVILLE
ASSESSOR'S MAPS BK. 245 , PG. 01 .
COUNTY OF TULARE, CALIF.

NOTE: Assessor's Block Numbers Shown in Ellipses
Assessor's Parcel Numbers Shown in Circles

99/00